Standard Diffuser Opal - 20 Metre Roll

DIF-STD-OD-20M / ITM001328



Datasheet

Standard Diffuser Opal - 20 Metre Roll



Length	Material	Warranty
20 Metres	PC	5 Years

SKU: DIF-STD-OD-20M
ITM: ITM001328

Key Features:

- **Dimensions (mm):** 16mm x 5mm x 20000mm
- **Body Colour:** Opal
- **Diffuser Colour:** Opal
- **Dimensions (whl):** 16 x 5 x 20000mm

Mechanical Data			
Body Colour:	Opal	**Diffuser Shape:**	Flat Diffuser
Illuminated Surface Width:	16mm	**Max LED Strip Light Width:**	12mm
Product Height:	5mm	**Product Length:**	20000mm
Product Weight:	660g	**Product Width:**	16mm

Photometric Data			
Beam Angle:	105°	**Diffuser Colour:**	Opal

Environmental Data			
Anti-Glare:	No	**Body Material:**	Polycarbonate
Impact Protection (IK):	IK8	**Ingress Protection (IP):**	IP20

Dimension Drawing

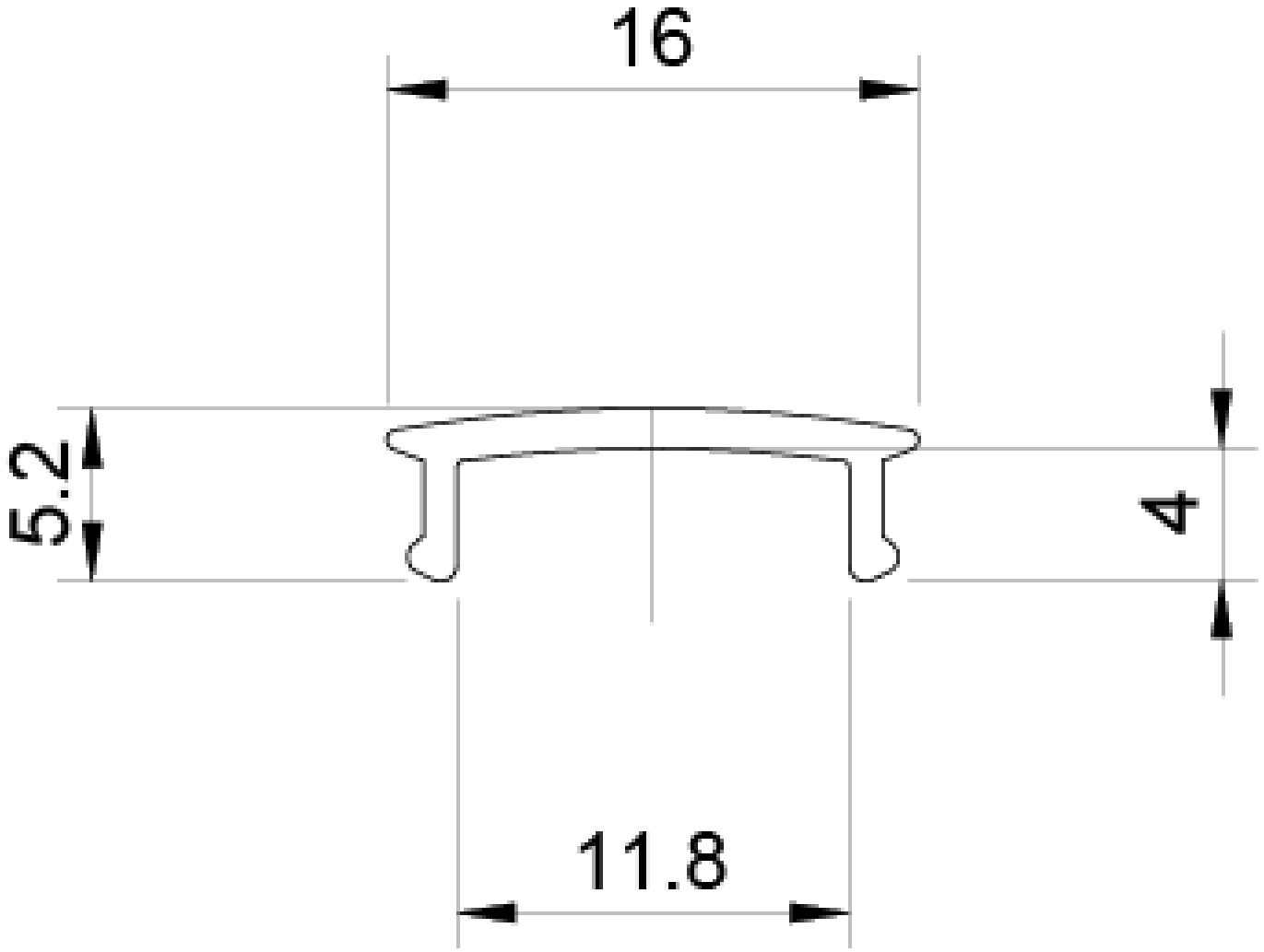

Packaging Data

Items / Sets Per Pack:	1	**Packaging Height:**	10mm
Packaging Length:	360mm	**Packaging Width:**	360mm
Packaging Weight:	660g		

Disclaimer

Tagra Lighting have taken reasonable care to ensure that the information in this datasheet is accurate at time of publication however it should be noted that all specifications are subject to tolerance. Descriptive specifications such as colour are subjective. Tagra Lighting reserve the right to update specifications without notice. The information in the datasheet may only be relied on by customers of Tagra Lighting in accordance with applicable terms and conditions.

Tagra Lighting is a trading name of T.R Ventures Limited, a company incorporated in England with registered number 07757720. Our registered office is Unit 2, Southfield Industrial Estate, Trafford Park, M17 1SJ.

www.tagra-lighting.co.uk

